DOOR LOCK PLATE

DATASHEET

STEELGEAR.CO.UK
UNIT 9 THESIGER CLOSE
WORTHING
BN11 2RN

www.steelgear.co.uk
info@steelgear.co.uk

SPECIFICATION :

Door Lock plate

Sometimes called hasp and staple. This is a lock plate that is designed to use a padlock when The plate is closed onto the hasp.

MATERIAL	A2 STAINLESS
MATERIAL TYPE	A2 / 304 STAINLESS
FINISH	Polished
NOTES	Use with a padlock

ADVANTAGES

- 4 securing points
- Will not rust
- Highly durable

STEELGEAR.CO.UK
UNIT 9 THESIGER CLOSE
WORTHING
BN11 2RN

www.steelgear.co.uk
info@steelgear.co.uk

DIMENSIONS (mm)

Open

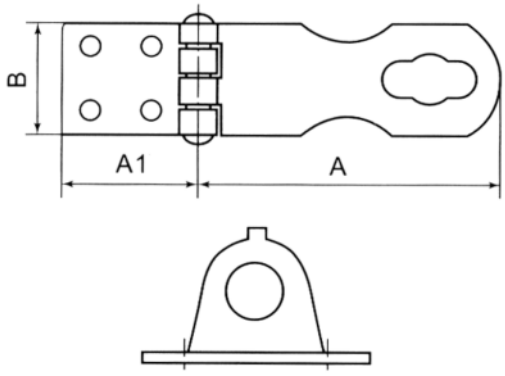

Closed

Code	Size A	A1	B	Weight (g)
SKU7120	64	29	37.5	64

Notes about load limits where shown

SWL or WLL = Safe working load limit (kg) : This is the maximum weight the product should carry.

BL = Break load : This is the maximum weight to break for the product and will vary from batch to batch. You should only use the product at the WLL or 1/4 the break load.

The above are guides for sizing of products and not a recommendation.
Do not use any product for lifting unless drawing is marked suitable for lifting - with this symbol Ⓛ

STEELGEAR.CO.UK
UNIT 9 THESIGER CLOSE
WORTHING
BN11 2RN

www.steelgear.co.uk
info@steelgear.co.uk